Generated from: https://iwap.com.pl/Sun-26-Jan-2025-30604.html
Generated on: 2026-04-16 20:17:20 | Copyright © 2026 IWAP OPTOELECTRONICS. All rights reserved.

Solar wattage installed in East Africa

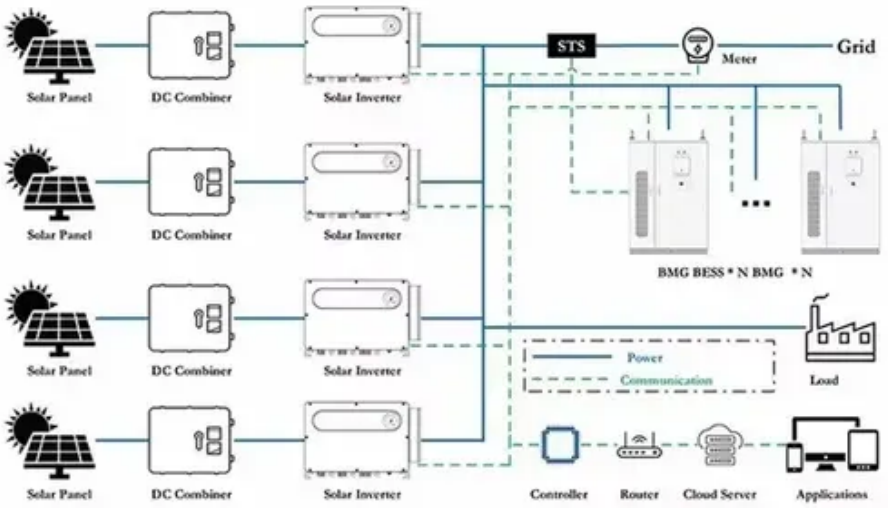

Solar wattage installed in East Africa

Data Insight: Top 5 African Countries Leading in Solar Energy ...

Data insight on the top 5 African countries in solar energy capacity, highlighting trends, investment drivers and what they mean for Africa's transition.

Africa's PV capacity nears 20GW as energy storage 'booms'

The Africa Solar Industry Association's 2025 market outlook has recorded a 2.5GW increase in PV installations in 2024.

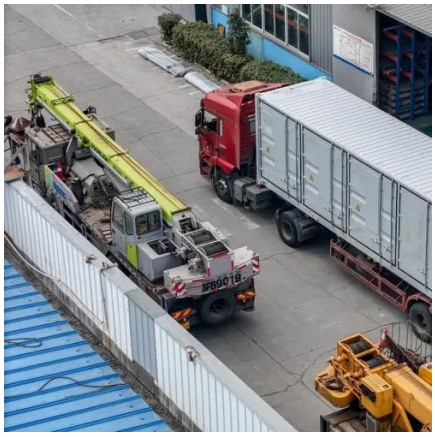

Solar PV potential in Africa for three generational time-scales

Solar energy is among the most accessible and abundant renewable energy sources, which can be utilised at different scales from few watts to several megawatts. Africa is particularly ...

Africa witnessing huge leap in solar energy use

Africa Solar Surge: Solar energy use in Africa skyrockets with over 20 GW installed, transforming the continent's energy landscape.

[23GW! PV Installations in Africa to Reach New Peak in 2025-2028]

PVTIME - According to the Africa Market Outlook for Solar PV 2025-2028, published by the Global Solar Council (GSC), annual new solar power capacity installed in Africa in 2024 was ...

Solar Power Growth and Outlook in Africa

Solar energy resource potential per year in Africa Africa's solar PV theoretical potential is more than 660 000 and CSP 470 000 TWh a year. East Africa above 200 000 TWh/year, Southern ...

[Global Solar Council , Global Solar Council: Africa Records Its ...]

New Global Solar Council report shows solar deployment spreading across more African countries, increasingly driven by distributed systems and rising demand for reliability -- while ...

[Top ten African nations with the highest solar energy adoption in ...]

Eight African countries installed more than 100 megawatts of solar capacity in 2025, compared with four countries in 2024. Chad installed 86 megawatts of solar capacity during the year. ...

[Africa's installed PV capacity estimated above 63 GW]

The Africa Solar Industry Association (AFSIA) has now identified 23.4 GW of operational solar projects across the continent but when taking into account Chinese PV export data, estimates ...

[Top 10 African Countries with the Largest Solar Energy Markets ...]

Africa's solar sector hit a milestone in 2025 with over 20GW of operational capacity and booming investments across the continent. But which countries are leading this revolution? Find out!

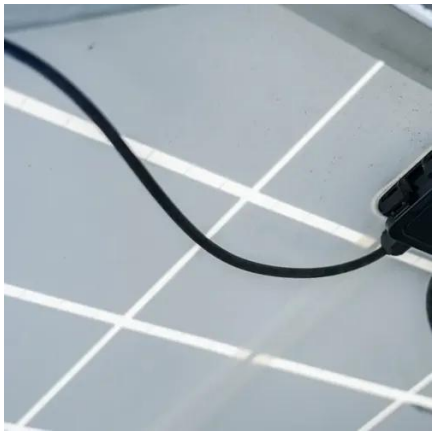

Contact Us

For catalog requests, pricing, or partnerships, please visit:
https://iwap.com.pl
Phone: +34 919 456 782
Email: info@iwap.com.pl

Scan the QR code to access our WhatsApp.